WIRING DIAGRAM

Air Handler with Factory Installed Heat (15 kW)

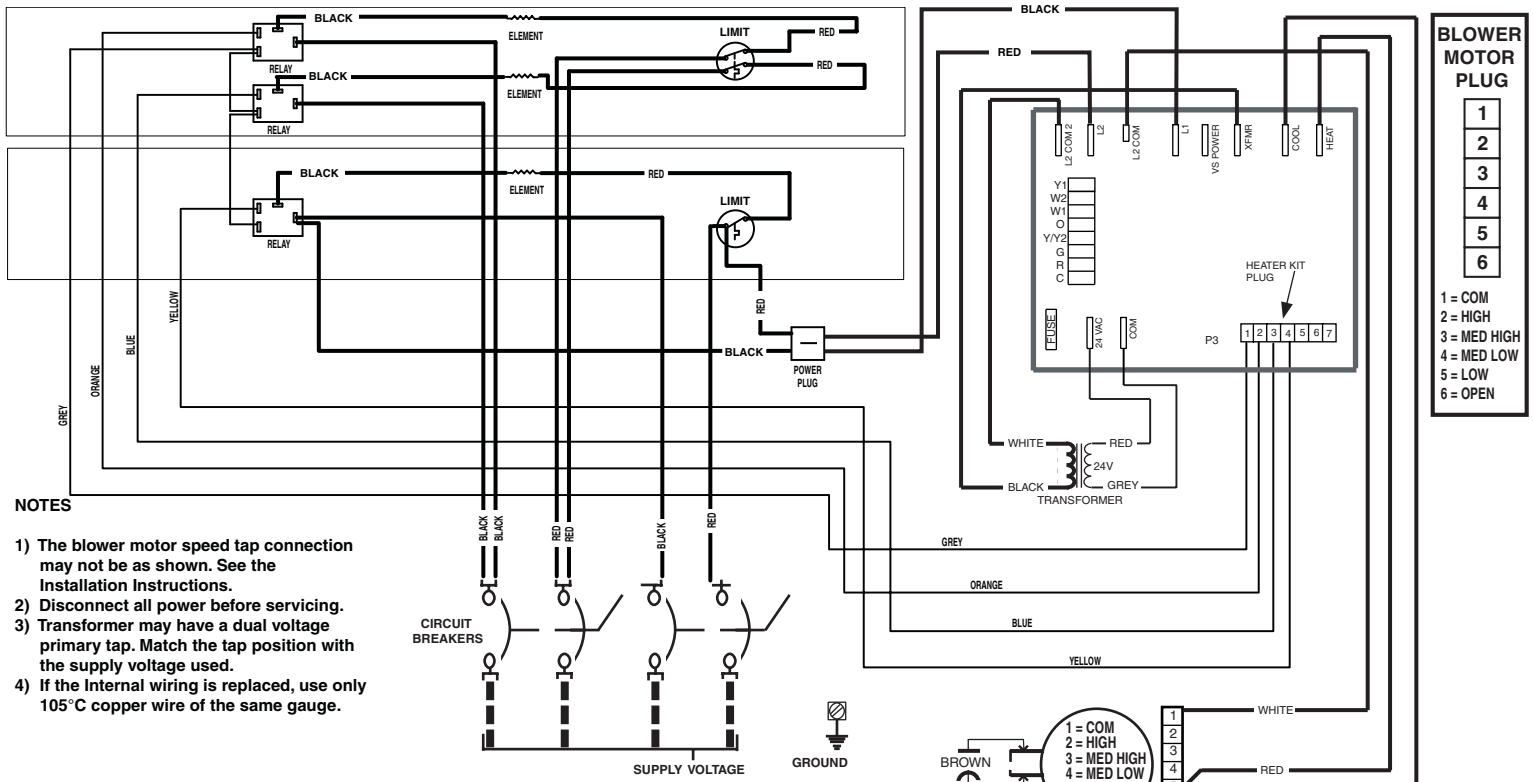

NOTES

1) The blower motor speed tap connection may not be as shown. See the Installation Instructions.
2) Disconnect all power before servicing.
3) Transformer may have a dual voltage primary tap. Match the tap position with the supply voltage used.
4) If the Internal wiring is replaced, use only 105°C copper wire of the same gauge.

Legend

Field Wiring	- - -
Factory Wiring:	
Low Voltage	———
High Voltage	═══

7105880

7105880