engineered for life™

ProTerra® Plug-in Heat Pump Water Heater with HydroBoost and LeakGuard (120V Shared Circuit)

Efficiency

- Up to 3.46 UEF reduces operating cost
- ENERGY STAR® certified
- Title 24 Compliant (JA13 Ready)

Performance

- Delivers hot water more efficiently than most standard electric water heaters
- Ambient operating range: 37-145°F is widest in class, offering more days of HP operation annually; designed to meet Northern Climate Spec (NEEA Tier 3)[2]
- Integrated HydroBoost mixing valve maximizes output performance
- Up to 84 gallon First Hour Rating[5]

Easy Installation

- Easy access side connections
- Factory installed plug-in power cord – plugs directly into a standard wall outlet
- Easily replaces a standard gas water heater

Integration

- Demand Response Ready – Built-in EcoPort (CTA-2045 Port) allows easy connection to Utility programs
- LED Screen with built-in water sensor alert with audible alarm[2]
- Built-in Wi-Fi powered by EcoNet® technology[2] and free mobile app gives users control over water heater, allowing for customizable temperature, vacation settings, scheduling, energy savings and system monitoring at home or away
- Integrated leak detection and prevention system with factory installed auto water shut-off valve limits leaks to no more than 20 ounces of water[1, 3]

LEAKGUARD™ WATER SHUT-OFF VALVE

- LeakSense™ Built-in Leak Detection System detects any leak large or small, internal or external[1, 4]

Operation Modes

- Heat Pump
- Vacation/Away: 2-28 days (or placed on hold indefinitely)

Plus…

- Premium grade anode rod extends the life of the tank
- 3/4" NPT water inlet and outlet; 3/4" condensate drain connections
- Easy access, top mounted washable air filter
- 2" Non-CFC foam insulation
- Enhanced flow brass drain valve
- Temperature and pressure relief valve installed
- Design certified to NSF/ANSI 372 (Lead Content)
- QMID: K3A8

Warranty

- 10-Year limited tank and parts warranty
  See Residential Warranty Certificate for complete information

Units meet or exceed ANSI requirements and have been tested according to D.O.E. procedures. Units meet or exceed the energy efficiency requirements of NAECA, ASHRAE standard 90, ICC Code and all state energy efficiency performance criteria.

[1]*Available with select models.* [2]*Wi-Fi broadband internet connection required.* [3]*Source: Rheem Leak-Sensing Data; testing under a vacuum lock using 50-gallon tank, no expansion tank, average tank pressure of 40 psi, assuming no additional faucets are opened.* [4]*Water leaks from the heater only, as tested across scenarios including a minimum of 5.5mL/hr volume leak rate, using most common installation scenarios.* [5]*First Hour Rating varies based on water heater set point temperature.*

This equipment contains refrigerant R–134A, which complies with New York State regulations (NYCRR Part 494).

ProTerra Plug-in Heat Pump with HydroBoost and LeakGuard™ (120V Shared Circuit)

40, 50, 65 and 80-Gallon Capacities
120 Volt / 1 PH
Electric

EcoNet®

These products meet a stringent set of our internally defined sustainability standards.

LEED Points = 3

See specifications chart on next page.

ProTerra Plug-in Heat Pump with HydroBoost and LeakGuard (120V Shared Circuit) Specifications

DESCRIPTION						ENERGY INFO	FEATURES				TANK DIMENSIONS (SEE SPACE REQUIREMENTS IN DIAGRAMS BELOW)			
								FIRST HR. RATING						
NOMINAL GALLON CAPACITY	RATED GALLON CAPACITY	MODEL NUMBER	MODEL VARIANT	ELECTRIC BREAKER SIZE (MINIMUM)[1]	AVERAGE ELECTRICAL WATTAGE	UNIFORM ENERGY FACTOR (UEF)	COMPRESSOR BTU/H	TANK SET POINT TEMP. (DEGREES °F)	GALLONS	RECOVERY IN G.P.H 60° F RISE	HEIGHT A	DIAM. B	UNIT WT. (LBS)	APPROX. SHIP WT. (LBS.)
40	36	PROPH40 T0 RH120-MSO	700952	15	440W	2.8	4200	140	45	12	63"	20-1/4"	157	194
50	46	PROPH50 T0 RH120-MSO	700954	15	440W	3.0	4200	140	55	12	62"	22-1/4"	178	218
65	59	PROPH65 T0 RH120-MSO	700955	15	395W	3.12	4200	128	63	12	65"	24-1/4"	225	262
80	72	PROPH80 T0 RH120-MSO	700964	15	395W	3.46	4200	132	84	12	75"	24-1/4"	244	281

Uniform Energy Factor and rated gallon capacity based on Department of Energy (DOE) requirements.
All units have integrated Wi-Fi control board.
[1]*In cases of fused protection, a time delay fused protection will be required.*

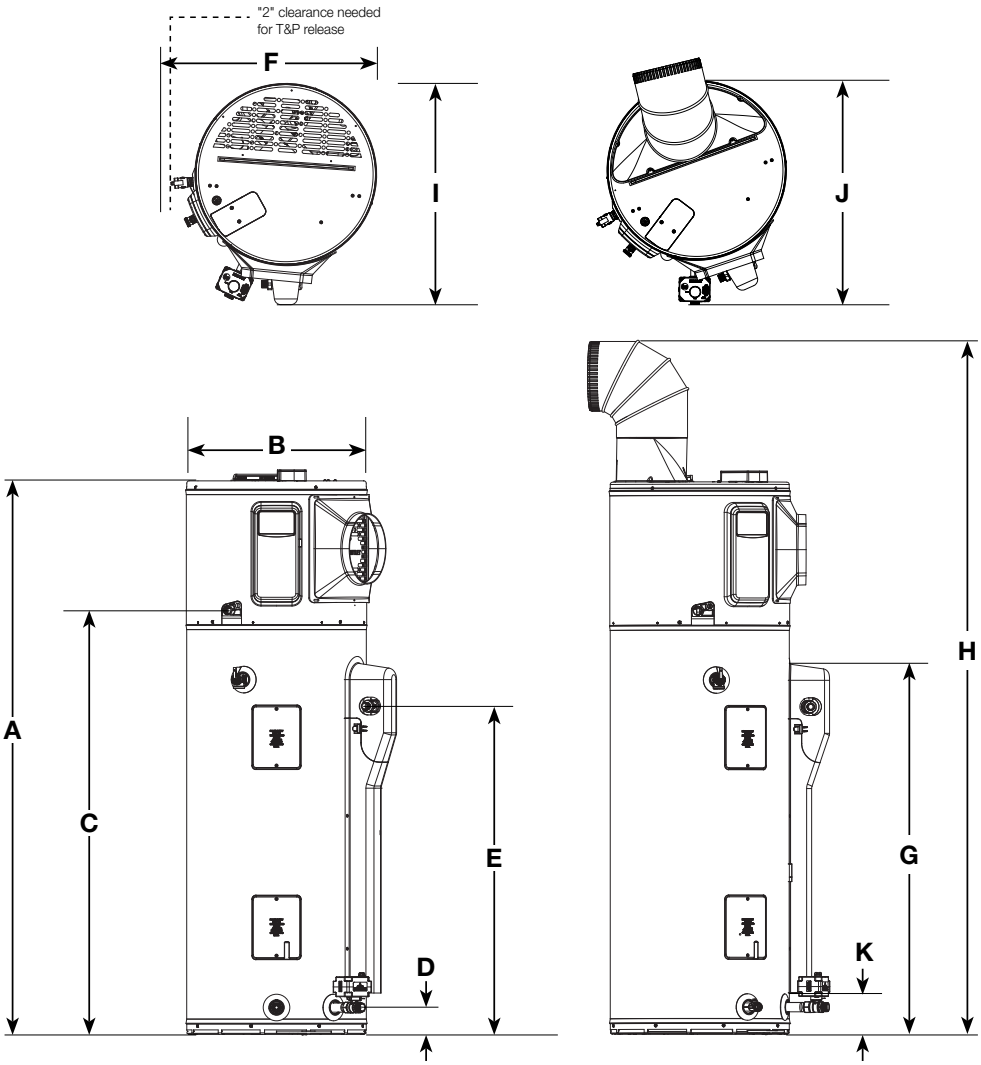

DESCRIPTION		DIMENSIONS (SHOWN IN INCHES)										
NOMINAL GALLON CAPACITY	MODEL NUMBER	A	B	C	D	E	F	G	H	I	J	K
40	PROPH40 T0 RH120-MSO	62-5/16	20-1/4	47	3-5/8	39-5/8	25-3/8	41-7/8	78-7/8	25	23-1/4	4-11/16
50	PROPH50 T0 RH120-MSO	61-3/4	22-1/4	47	3-5/8	39-5/8	27-3/8	41-1/2	78-5/8	27-3/8	25-9/16	4-5/16
65	PROPH65 T0 RH120-MSO	64-3/16	24-1/4	49	3-7/8	42-3/8	29-1/2	44-1-16	81-1/8	29	28-1/16	5
80	PROPH80 T0 RH120-MSO	74-3/16	24-1/4	59	3-7/8	42-3/8	29-1/2	54-5-16	91	29	27-3/8	5-1/16

Plug-in Heat Pump with HydroBoost Water Heater Installation Guidelines to Provide Optimal Efficiency

Heater: Not Ducted

Room size: Larger than 700 ft^3 (e.g. 7' x 10' x 10').

Requirements:
No additional ventilation needed

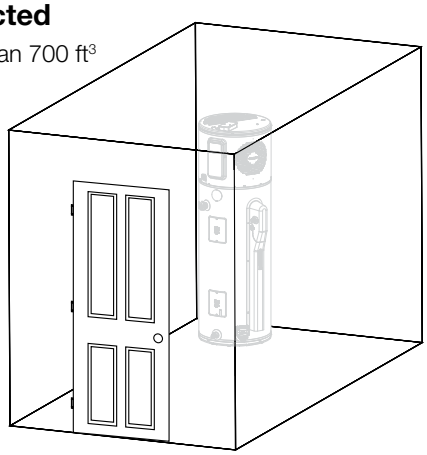

Heater: Not Ducted

Room size: Smaller than 700 ft^3 (e.g. 7' x 10' x 10').

Requirements:
Full louvered door OR two louvers top and bottom[1]

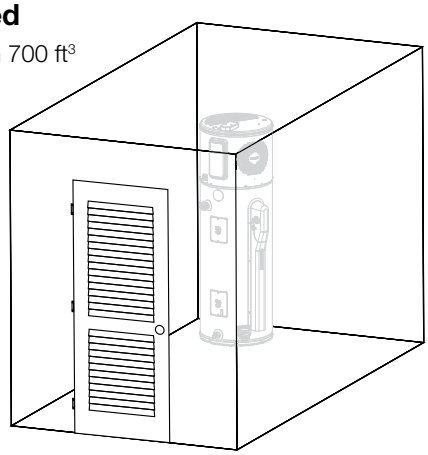

Heater: Ducted With Inlet or Outlet Duct

Room size:
Any size room

Requirements: Air gap under door equal to 18 in^2 (0.75" clearance)

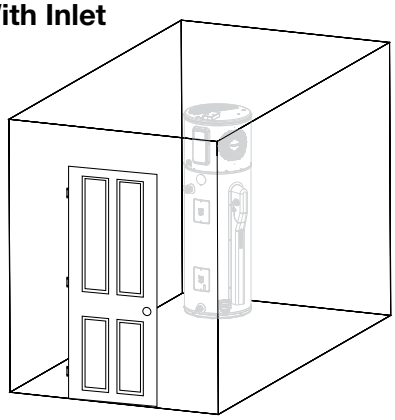

Heater: Ducted With Inlet and Outlet Duct

Room size:
Any size room

Requirements:
No additional ventilation needed

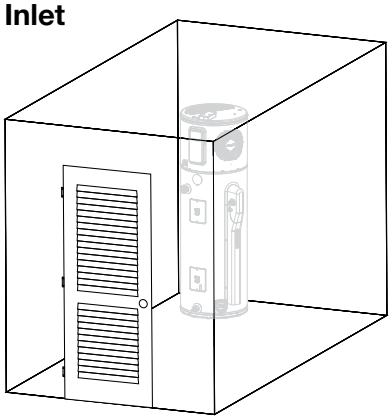

Notice

If air temperature in installed location drops more than 15°F (8°C) during heating, air circulation is insufficient for efficient operation. Utilize ducting to direct cold exhaust air to another location

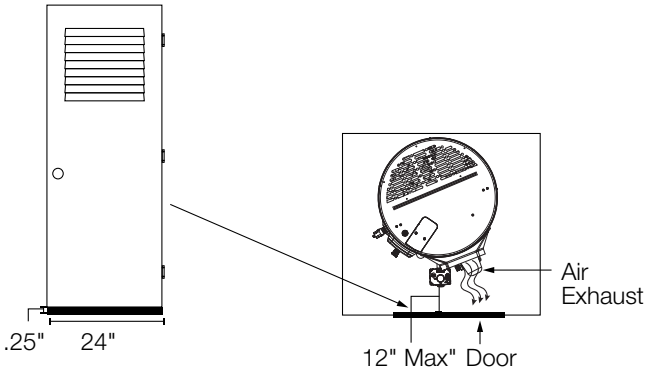

Heater: Not Ducted

Room size: Small Closet

Requirements:
- Air gap under door equals to 18 in^2 (0.75" clearance).
- Louver must be located the same height on door as the air exhaust on heater.
- Heater air exhaust must be positioned towards louver within one foot of door.

For optimal operation, installation in gray US map zone is recommended. When choosing the proper water heater, consult your local plumbing contractor.

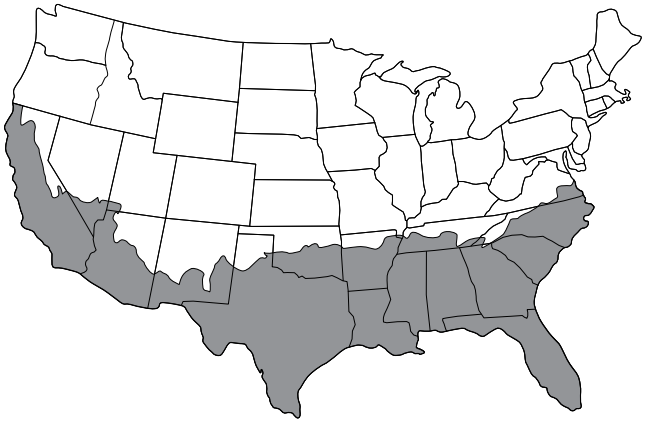

Average Ambient Air Temp in January

Below 37°F

Above 37°F

MINIMUM CLEARANCES (WITHOUT DUCTING)		
REAR	SIDES	TOP
0"	0"	6"

FOR EASIER SERVICEABILITY		
REAR	SIDES	TOP
6"	6"	6"

[1]*Minimum louver free opening area required for not ducted room installation application will be 3.25 sq ft.*

engineered for life™

Plug-in Heat Pump with HydroBoost Service Parts and Accessories List

PART NUMBER	DESCRIPTION	USE FOR
AP19134	Leak Sensor	Automatic detection of internal and external leaks
AP20180	Shutoff Valve	Automatic shut off of water supply to unit
AP21365	Inlet Duct Adapter	Allows for ducting to be connected on the top inlet
AP17829	Outlet Duct Adapter	Allows for ducting to be connected to the unit
SP20882	Earthquake Isolation Kit	Installations in seismic regions
SP20883	Vibration Isolation Kit	Installation on non-concrete floors
SP20884	8" Diameter UL Certified Termination Kit	Termination to the outside or to the attic with 8" diameter
SP20885	7" Diameter UL Certified Termination Kit	Termination to the outside or to the attic with 7" diameter
SP20886	6" Diameter UL Certified Termination Kit	Termination to the outside or to the attic with 6" diameter
SP20887	5" Diameter UL Certified Termination Kit	Termination to the outside or to the attic with 5" diameter
SP20888	8" Rheem Approved Damper Kit	Exhaust only to the outside ducting configuration (no inlet duct)
SP20889	25' Flexible 8" Diameter Duct Kit	For up to 25' of ducting
SP20890	Rigid Elbow Duct Kit	Installation in tight places where space needs to be minimized
FR-80	Little Firefighter Water Heater Front Restraint	High strength soft woven restraints for installation in seismic regions

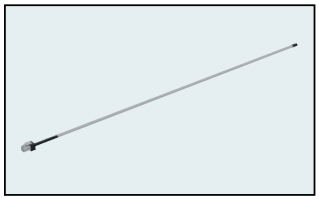
AP19134

AP20180

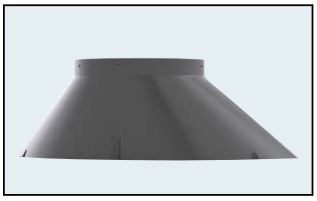
AP21365

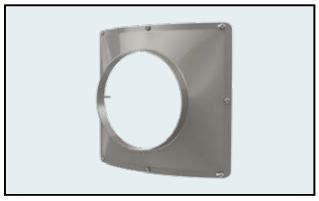
AP17829

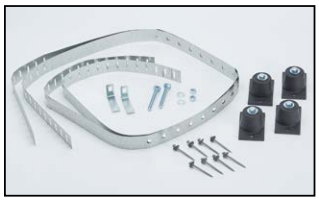
SP20882

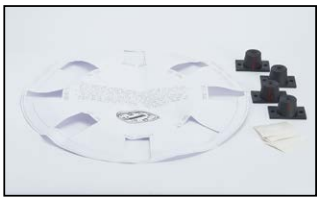
SP20883

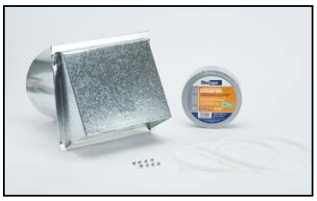
SP20884

SP20885

SP20886

SP20887

SP20888

SP20889

SP20890

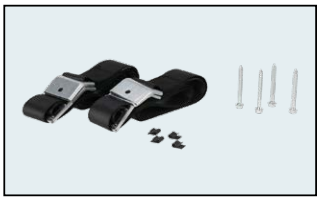
FR-80

In keeping with its policy of continuous progress and product improvement, Rheem reserves the right to make changes without notice.

Rheem Water Heating • 1115 Northmeadow Parkway, Suite 100
Roswell, Georgia 30076 • www.Rheem.com

Rheem Canada Ltd./Ltée • 125 Edgeware Road, Unit 1
Brampton, Ontario L6Y 0P5 • www.Rheem.ca

04/26 FORM NO. RH-PIHP-SC-SO-SS Rev. 1